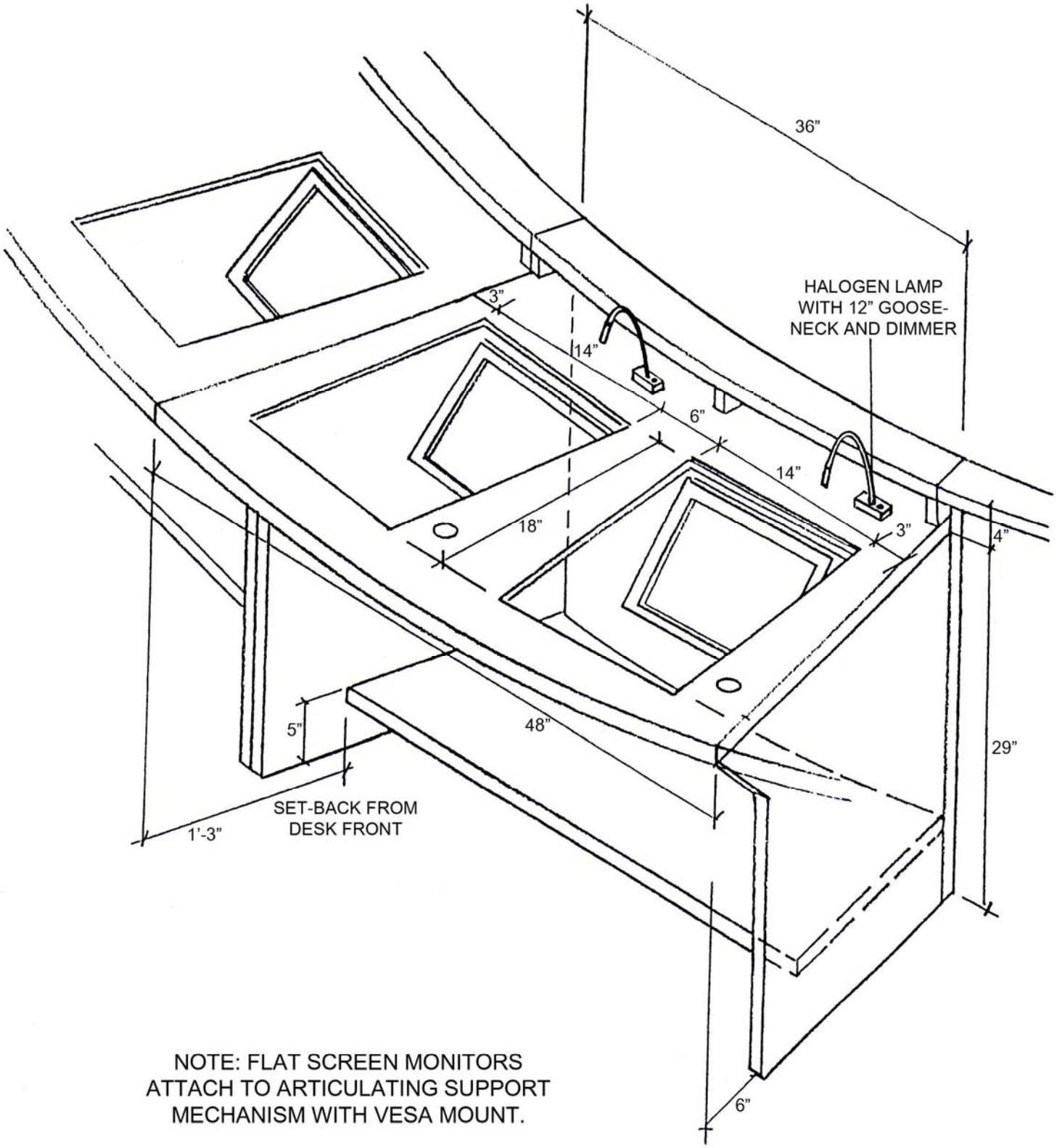

NOTE: FLAT SCREEN MONITORS
ATTACH TO ARTICULATING SUPPORT
MECHANISM WITH VESA MOUNT.